Ariens® 911

Series

⚠ SAFETY MESSAGE ⚠

The product for which you have requested information or replacement parts is not a current product. The replacement models incorporate product designs, safety features, safety instructions or warnings which represent the latest "State Of The Art" developments. For your safety and those around you please contact your nearest Ariens/Gravely Dealer for a demonstration of the current product safety provisions and features.

Walk Behind Lawn Mowers

Owner's Manual

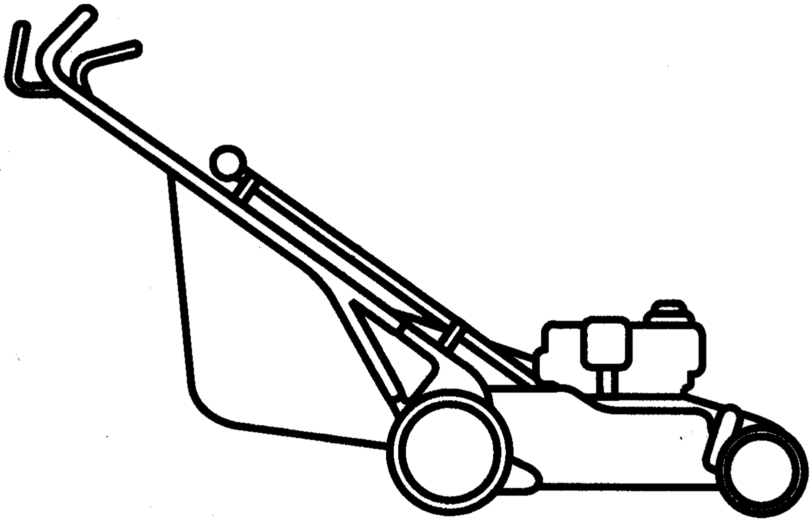

PRINTED IN USA

PART NO. 011670J
1-96

A Message to Ariens Customers...

Welcome to the world of Ariens equipment. We are pleased that you have selected Ariens and sincerely believe you have purchased the best equipment available. The care you give your new Ariens equipment will determine the satisfaction and service life you will obtain from it. Use this manual and the engine manual supplied as your guide. By observing the instructions and suggestions in these manuals, your Ariens equipment will serve you well for many years.

Your Ariens dealer will be happy to supply any service or advice which may be required to keep your Ariens equipment operating at peak efficiency. He stocks genuine Ariens parts and lubricants, manufactured with the same precision and skill as the original equipment. His trained staff is kept well informed on the best methods of servicing Ariens equipment and is ready and able to serve you. If engine repairs or services are required, they can be obtained from an Ariens dealer or from an authorized engine manufacturer's service center. If service is required, be prepared to supply the service person with the Model Number and Serial Number of the equipment and engine, as well as a full description of the problem encountered.

NOTE: The descriptions and specifications contained in this manual were in effect at the time the manual was approved for printing. Ariens Company reserves the right to discontinue models without notice and without incurring obligation. The equipment described within this manual may not be identified as either standard or optional and the various illustrations may not all be applicable to your particular unit. If you have questions, always check with your Ariens dealer.

Safety Alert Symbol and Notations

The following safety notations are used throughout this manual to call attention to special information or operating procedures. Understand the message in each notation and be alert to unsafe conditions and the possibility of personal injury.

NOTE: A **NOTE** points out general reference information regarding proper operation and maintenance practices.

IMPORTANT: An **IMPORTANT** statement indicates specific procedures or information that is required to prevent damage to the machine or its attachments.

This safety alert symbol is used to attract your attention! PERSONAL SAFETY — IS INVOLVED! When you see this symbol -BECOME ALERT - HEED ITS MESSAGE.

DANGER: Indicates an imminently hazardous situation that, if not avoided, will result in death or serious injury.

WARNING: Indicates a potentially hazardous situation that, if not avoided, could result in death or serious injury.

CAUTION: Indicates a potentially hazardous situation that, if not avoided, may result in minor moderate injury.

WARNING

The engine exhaust from this product contains chemicals known to the State of California to cause cancer, birth defects or other reproductive harm.

OL0010

Contents

Safety Alert and Notations i
Safety Precautions 3
Safety Decals 5
Controls and Features 6
Operation 7
Lubrication and Maintenance 12
Adjustments 21
Storage 23
Service Manual 24
Trouble Shooting 24
Specifications 25
Dealer Preparation 31
Accessories 34
Warranty 35

Specific Model and Serial Numbers are on a label located on the frame of your mower and on a label located on the product registration form. Record and transfer the label from the product registration to place indicated below. Use these numbers whenever parts or service is required.

Model Number ____________________

Serial Number ____________________

TRANSFER MODEL SERIAL LABEL FROM PRODUCT REGISTRATION

Models

Model 911065 (LM230sp)
4 Cycle,Kawasaki 5 HP
Recoil, Self-Propelled
Serial Number 000101 and up

Model 911067 (MM223)
4 Cycle, Tecumseh Centura 5 HP
Recoil, Push
Serial Number 000101 and up

Model 911068 (MM224sp)
4 Cycle, Tecumseh Centura 5.5 HP
Recoil, Self Propelled
Serial Number 000101 and up

Model 911069 (LM225sp)
4 Cycle,Briggs & Stratton Diamond Plus 5.5 HP
Recoil, Self Propelled
Serial Number 000101 and up

Model 911070 (LM226sp) - Swivel
4 Cycle,Briggs & Stratton Diamond Plus 5.5 HP
Recoil, Self-Propelled
Serial Number 000101 and up

Model 911071 (LM227sp) - Swivel
4 Cycle,Tecumseh Vector 6 HP
Electric Start, Self Propelled
Serial Number 000101 and up

Model 911072 (LM228sp)
4 Cycle, Tecumseh Vector 6 HP
Recoil, Self Propelled
Serial Number 000101 and up

Model 911073 (LM229sp) - Swivel
4 Cycle, Tecumseh Vector 6 HP
Recoil, Self Propelled
Serial Number 000101 and up

Model 911304 (LM21)
4 Cycle, Briggs & Stratton Quantum 5 HP
Recoil, Push
Serial Number 001001 and up

Model 911311 (LM21s)
4 Cycle, Briggs & Stratton Quantum 5 HP
Recoil, Self Propelled
Serial Number 001001 and up

© Ariens Company-All Rights Reserved

Models (Continued)

Model 911312 (LM21sm)
4 Cycle, Tecumseh Vector 6 HP
Recoil, Self-Propelled
Serial Number 000101 and up

Model 911313 (LM21s)
4 Cycle, Tecumseh Vector 6 HP
Recoil, Self Propelled
Serial Number 000101 and up

Model 911314 (LM21sw) - Swivel
4 Cycle, Tecumseh Vector 6 HP
Recoil, Self Propelled
Serial Number 000101 and up

Model 911315 (LM21se)
4 Cycle, Tecumseh Vector 6 HP
Electric Start, Self Propelled
Serial Number 000101 and up

Model 911316 (LM21scsw)
Self Propelled
Serial Number 000101 and up

Model 911317 (LM21scsw) - Swivel
4 Cycle, Kawasaki 5 HP
Recoil, Self Propelled
Serial Number 000101 and up

Model 911318 (LM21s)
2 Cycle, Tecumseh 5 HP
Recoil, Self Propelled
Serial Number 000101 and up

Model 911319 (LM21sw)
4 Cycle Briggs & Stratton Quantum 5 HP
Recoil, Self Propelled
Serial Number 000101 and up

Model 911469 (LM232sp)
4 Cycle, Briggs & Stratton Diamond Plus 5.5 HP
Recoil, Self-Propelled
Serial Number 000101 and up

Model 911470 (LM233sp) - Swivel
4 Cycle, Briggs & Stratton Diamond Plus 5.5 HP
Recoil, Self-Propelled
Serial Number 000101 and up

Model 911471 (LM234sp) - Swivel
4 Cycle, Tecumseh Vector 6 HP
Electric Start, Self Propelled
Serial Number 000101 and up

Model 911472 (LM235sp)
4 Cycle, Tecumseh Vector 6 HP
Recoil, Self-Propelled
Serial Number 000101 and up

Model 911473 (LM236sp) - Swivel
4 Cycle, Tecumseh Vector 6 HP
Recoil, Self-Propelled
Serial Number 000101 and up

Safety Precautions

Training

Read and understand this Owner's Manual and engine manufacturer's instructions before operating unit. Be thoroughly familiar with controls and proper use of equipment. Know how to disengage controls and stop unit quickly in an emergency.

Understand and follow each Danger, Warning, Caution and Instructional decal installed on mower.

NEVER allow children to operate mower. **DO NOT** allow adults to operate it without proper instruction.

Keep the area of operation clear of all persons, particularly children and pets.

Safe operation of this equipment requires your complete and unimpaired attention at all times. **DO NOT** operate unit after or during the consumption of medication, drugs or alcohol.

Preparation

Thoroughly inspect and clear work area of objects which might be picked up and thrown. Remove all stones, sticks, wires, and other foreign objects.

Wear sturdy footwear. **DO NOT** operate mower barefoot or when wearing open sandals or canvas shoes. **DO NOT** wear loose clothing that may get caught in rotating parts of unit.

NEVER attempt to make any adjustments to unit while engine is running (except where specifically recommended). **DO NOT** make cutting height wheel adjustment while engine is running.

Gasoline is highly flammable and its vapors are explosive. Handle with care. Use an approved (RED) gasoline container.

NEVER allow smoking materials, sparks or flame (match, pilot light, etc.) near mower or gasoline container.

Check fuel supply before starting engine. **DO NOT** fill gasoline tank indoors, when engine is running, or while engine is still hot. Allow engine to cool several minutes before removing fuel cap. Replace gasoline tank cap securely and clean up any spilled fuel before starting engine.

DO NOT start the engine or operate mower with the Side Discharge Opening Cover or the Side Discharge Deflector removed. **NEVER** operate the engine with the Rear Door open unless the Grass Bag is in place. Doing so may result in serious injury due to Blade contact or thrown objects. When mulching the Side Discharge Opening Cover must be installed and the Rear Door fully closed whenever the engine is operating.

Operation

Keep equipment in good condition. Keep all shields in place and safety devices operating properly.

Operate unit only when there is good visibility and light.

DO NOT put hands or feet near, or under, rotating parts. Keep clear of the discharge opening and mower pan at all times. **NEVER** open the Rear Door without the Grass Bag in place when the engine is operating.

Open doors if unit is run in garage, exhaust fumes are dangerous. **DO NOT** run engine in an enclosed area.

DO NOT operate mower in wet grass. Always be sure of your footing, keep a firm hold on handlebar and walk, never run.

Do not operate mower on gravel or on loose material such as sand. Stop mower when crossing gravel drives, walks, or roads. Objects may be picked up and thrown, causing damage or injury.

NEVER direct discharge of material toward bystanders nor allow anyone near equipment while unit is in operation. The operator is responsible for the safety of bystanders.

Be familiar with area of operation. Stay alert for holes, rocks, roots and hidden hazards in area of operation. Keep away from drop-offs.

Safety Precautions (Continued)

Mow across face of slopes, never up and down. Be especially cautious when changing direction on slopes. **DO NOT** mow steep slopes.

Engine/Blade Control feature on mower will cause engine and blade to stop whenever operator releases control on handlebar. If feature fails to operate, disconnect spark plug wire and adjust or have it repaired before using unit.

Stop engine, wait for moving parts to stop, remove ignition wire and secure away from spark plug before attempting to; unclog discharge chute, when making any repairs, adjustments, inspections or cleaning unit.

DO NOT touch equipment parts which might be hot from operation. Before attempting to maintain, adjust or service allow such parts to cool .

If equipment vibrates abnormally, stop engine at once, wait for moving parts to stop and remove wire from spark plug. Abnormal vibration is a warning of trouble. Repair any damage before restarting unit. (See your Ariens Dealer.)

After striking a foreign object, stop engine, wait for moving parts to stop and remove wire from spark plug. Thoroughly inspect unit for any damage and repair damage before restarting and operating unit.

Take all possible precautions when leaving unit unattended. Remove and keep wire away from spark plug to prevent accidental starting or unauthorized use. (On electric start units, remove key or unplug battery.)

Maintenance and Storage

Use only attachment or replacement parts designed for your unit. See your Ariens Dealer.

DO NOT change engine governor setting or over speed engine.

Keep all nuts, bolts and screws tight and be sure equipment is in safe working condition. Check all hardware at regular intervals.

Check grass bag for wear and/or deterioration. Replace only with Ariens original equipment replacement part for safety.

Before tipping mower to work or clean underside. Disconnect ignition wire and secure away from spark plug. Follow instructions in Lubrication and Maintenance Section of this manual.

To reduce fire hazard and overheating, keep equipment free of grass, leaves, debris or excessive lubricants.

Worn out mufflers are more than just a noise nuisance and should be replaced immediately. Continued use could result in fire or explosion.

Follow engine manufacturers safety instructions when servicing engine.

NEVER store equipment with gasoline in tank inside a building where fumes may reach an open flame or spark. Allow engine to cool before storing in any enclosure.

Refer to Storage Section of this Owner's Manual for important instructions if unit is to be stored for extended periods.

Safety Decals

Figure 1: Safety Decals

Controls and Features

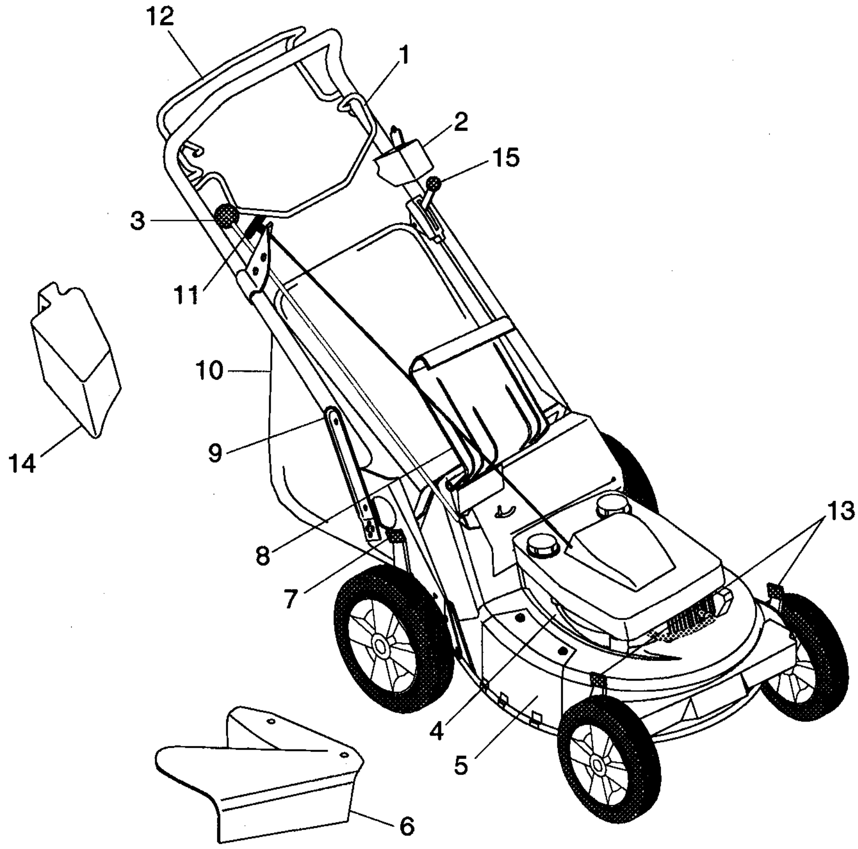

1. Engine Control
2. Electric Start Control (Electric Start Models)
3. Speed Selector (Self Propelled Models)
4. Primer
5. Side Discharge Opening Cover
6. Side Discharge Deflector
7. Cutting Height Levers (Wheel Adjustors)
8. Rear Door
9. Adjustable and Folding Handlebars
10. Grass Bag
11. Rewind Starter
12. Wheel Drive Control (Self Propelled Models)
13. Cutting Height Levers (Wheel Adjustors - See Page 9 For Swivel Wheel Models)
14. Mulch Master™ Plug
15. Throttle Control (Professional Models)

Figure 2: Control and Feature Locations

Operation

PRE-STARTING

- Check that engine crankcase oil is at proper level using dipstick. Fill or change as per instructions in Lubrication and Maintenance Section. Two cycle engines require that oil be mixed with fuel.

NOTE: This product is equipped with an internal combustion engine. DO NOT use on or near any unimproved, forest or brush covered land unless the exhaust system is equipped with a spark arrester meeting applicable local, state or federal laws. A spark arrester, if used, must be maintained in effective working order by the operator. See your Ariens Dealer or engine manufacturer's service center.

CAUTION: Make sure all hardware is tight, all safety devices in place and all adjustments made correctly.

- Check air cleaner for dirt. Clean as required. See Lubrication and Maintenance Section of this manual.

Fuel

WARNING: Gasoline is highly flammable and must be handled with care. Allow engine to cool several minutes before removing fuel tank cap. Never fill tank when engine is running or is hot from operation. DO NOT allow open flame, matches, or smoking in area. DO NOT over fill. Allow about 1/4" of tank space for fuel expansion. Wipe up any spills and allow vapors to dissipate before starting engine. Use approved (Red) gasoline container.

NOTE: To prevent foreign particles from entering tank while filling; wipe dust, dirt and debris from around cap before removing it.

- Check fuel supply.

For 4 cycle engine, fill fuel tank with a good grade of fresh lead free gasoline. DO NOT use premium, gasohol, or mix gasoline with oil. (Use of lead free gasoline produces fewer combustion deposits.

For 2 cycle engine, the recommended gasoline to oil ratio is 50:1. For every 50 parts of gasoline, mix one part Boating Industry Association two cycle (BIA TC-W) approved oil. One gallon of gasoline requires 2.5 ounces of oil.

IMPORTANT: Observe the recommended gasoline to oil mixing ratio to prevent engine damage.

To assure thorougn mixing of gasoline and oil, fill container partially with gasoline, add oil, shake container vigorously, add remainder of gasoline into container and shake vigorously

Handlebar Height

Handlebar adjusts to four positions by selecting holes in braces. Select a safe comfortable height and place pin through hole in brace that is closest to that height. Refer to Adjustment Section. (On professional models, 911065 and 911317 nuts and carriage bolts replace pin). Adjust handlebar to a safe, comfortable operator height according to instructions in Adjustments Section of this manual.

Mower Configurations

WARNING: DO NOT operate mower unless either side discharge opening cover or side discharge deflector is installed. Objects may be picked up and thrown causing damage or personal injury. Never operate engine with rear door open unless grass bag is in place.

To configure your mower for bagging, side discharge or mulching, proceed as follows:

Bagging: Lift rear door, place bar of grass bag frame on lip of mounting flange and lower rear door. If necessary, lift rear of grass bag frame to lock in position.

Be sure there are no openings between bag and mounting surface after installing bag, if necessary clear bag mounting surface of debris.

To remove grass bag, lift rear door. Then with handle, lift bag up off mounting flange and close rear door.

CAUTION: Objects may be thrown. Check Grass Bag frequently for wear or deterioration. Replace worn or damaged bag with Ariens original equipment replacement part only.

Operation (Continued)

Side Discharge: With grass bag removed, remove two lock nuts and washers that secure side discharge opening cover to mower. Lift cover to free tabs from slots and remove cover from mower.

Position holes in side discharge deflector over studs on mower with tab on rear edge of deflector placed onto edge of discharge opening. Secure deflector with cover hardware.

CAUTION: NEVER direct discharge of material toward bystanders nor allow anyone near equipment while unit is in operation.

Mulching: With grass bag removed and side discharge opening cover installed, install the Mulchmaster Plug by the handle with the beveled face to the left. Open rear door and insert Mulchmaster Plug. Rear door will close flush with proper insertion.

For maximum mulching performance, install the mulchmaster mulching kit. Installation instructions are provided in the accessory kit.

Cutting Height - Standard Models

DANGER: To avoid inadvertent blade contact, NEVER attempt to make any cutting height adjustments while engine is running.

CAUTION: On self-propelled models, both rear wheels must be positioned at same height or traction drive may not clutch or operate properly.

To change cutting height, move Cutting Height levers one notch at a time on each wheel until desired height of cut is obtained.

NOTE: Each Wheel on mower must be set at the same height for a level cut.

Low Setting = 1-1/4" cut grass length.
Second Notch = 1-3/4" cut grass length.
Third Notch = 2-1/8" cut grass length.
Fourth Notch = 2-5/8" cut grass length.
Fifth Notch = 3" cut grass length.
High Setting = 3-1/2" cut grass length.

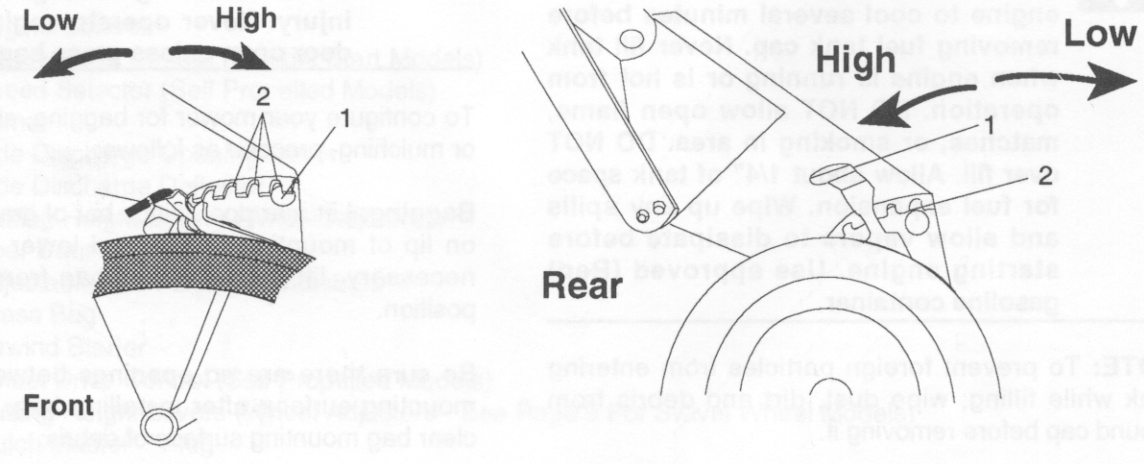

1. Cutting Height Lever
2. Notch

Figure 3: Cutting Height Levers (Wheel Adjusters)

Cutting Height - Swivel Models

To change front wheel cutting height, insert clevis pin into the holes that corresponds to the desired cutting height. (Figure 4).

To change rear wheel cutting height, move cutting height levers one notch at a time until the desired cutting height is obtained. (Figure 4)

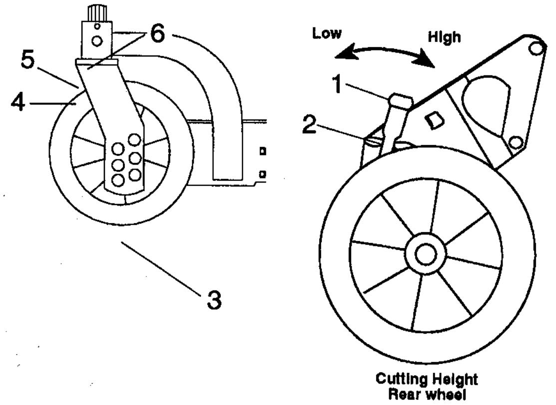

Figure 4: Cutting Height - Swivel Models

1. Cutting Height Lever
2. Notches
3. Clevis Pin & Swivel Height Adjustment Holes
4. Grease Fitting
5. Swivel Lock Hole (Clevis Pin Thru To Lock)
6. Lynch Pin Storage Hole (Clevis Pin Thru To Swivel)

STARTING

WARNING: DO NOT attempt to start your engine at this time. Familiarize yourself with controls to see what they do, how they work and thoroughly read and understand entire Operator's Manual first.

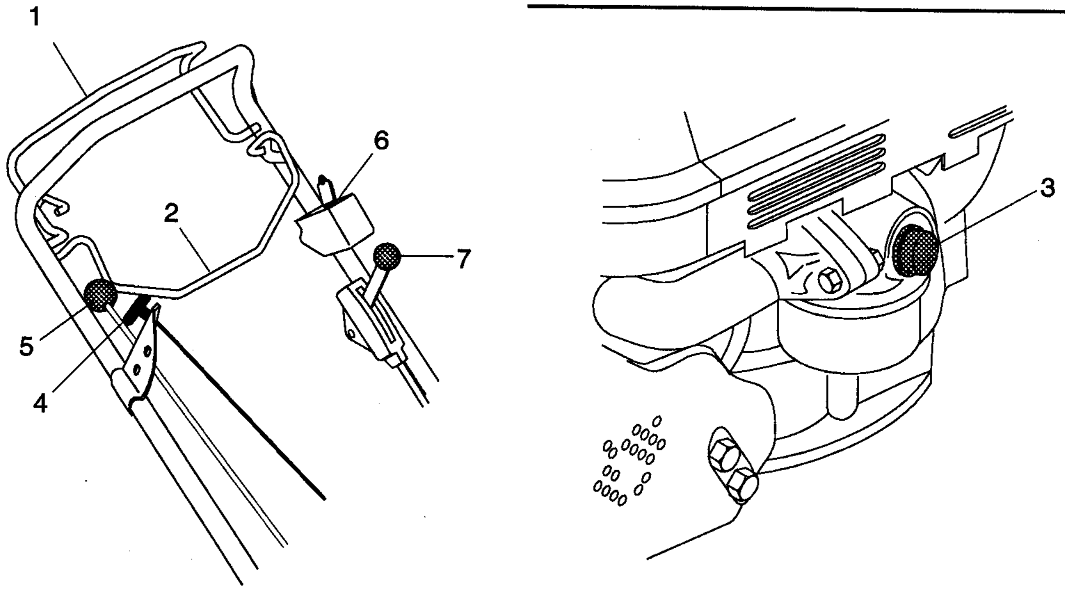

1. Wheel Drive Control (Self Propelled Model)
2. Engine Control
3. Primer
4. Rewind Starter
5. Speed Selector (Self Propelled Model)
6. Key Switch (Electric Start Model)
7. Throttle Control (Professional Models Only)

Figure 5: Controls

Primer

- To start a cold engine, push Primer bulb three times.

Throttle

- For engines with a choke, place throttle control in the choke position. Once the engine has started, place throttle in the high speed detent.

NOTE: It is not necessary to prime or choke a warm engine.

Engine/Blade Control

- The engine is equipped with a switch, that stops the engine ignition, and a brake, that stops the engine (blade), within 3 seconds after the operator releases the Engine Control. The Engine Control must be held against the handlebar in order to start the engine as well as during mowing operations to keep the engine running. Releasing the control during operation stops the engine and blade.

CAUTION: Function of Engine/Blade Control should be checked regularly per instructions in Adjustments Section of this manual. Improper function of control could contribute to operator or bystander injury.

Rewind Starter

- Grasp Rewind Starter handle and pull rope out slowly until it pulls harder (this is the compression stroke) and let rope rewind slowly. Then pull rope with rapid continuous full arm stroke to start engine and allow rope to rewind slowly.

IMPORTANT: DO NOT let starter rope snap back against bracket.

Repeat above instructions until engine starts. (Refer to engine manufacturer's instructions.)

NOTE: Start engine (blade) on a hard level surface that is free of debris. To start on lawn, push down on handlebar to allow blade to rotate above grass.

Electric Start

- On electric start models, turn the key with the Engine Control held against the handlebar. (Recoil may be used to start the engine. The key must be in the on position.)

Wheel Drive Control (self-propelled models)

CAUTION: Holding Wheel Drive Control of self-propelled models against handlebar, when attempting to start mower, will propel mower forward.

- On self-propelled models, with engine running, slowly squeeze and hold Wheel Drive Control against handlebar to propel mower forward. Release Wheel Drive Control to stop forward motion.

Speed Selector (self-propelled models)

Speed Selector is used to select variable forward travel speeds of mower.

Lowest speed is when Speed Selector is pulled all the way to rear and highest speed is provided when it is pushed all the way forward.

With Speed Selector set at a slow travel speed and engine running, engage Wheel Drive Control, then increase speed with Speed Selector to a safe comfortable walking pace. Once speed has been selected, Speed Selector should remain in this position, if not, adjust speed control bell crank spring tension per instructions in Adjustments Section.

Stopping

- Release control, and allow engine to cool. On electric start models turn key to off position after releasing controls

CAUTION: Remove wire from spark plug to prevent accidental starting or unauthorized use of mower.

Operating Tips

The following tips will help you to mow safely, achieve maximum performance from your mower and maintain the appearance of your lawn.

When Bagging, be sure to release Engine/Blade Control before attempting to remove and empty grass bag. Empty bag before it becomes overloaded, clogs mower and/or affects performance.

CAUTION: If clog or obstruction prevents grass flow, release Engine/Blade Control and disconnect spark plug wire before attempting to clear away any clogs.

CAUTION: On swivel wheel models when mowing on slopes it is recommended that the lynch pin be positioned thru the swivel lock hole. If wheels are in the swivel position and control handles are released the mower may "free roll" downhill. Never mow on steep slopes.

Restarting engine will be easier if mower is allowed to completely discharge clippings before stopping engine.

On electric start model, if starter will not cycle because of grass buildup under deck, rotate blade with rewind starter to clear blockage.

Be sure your mower blade is sharp. A dull blade will tear grass blades. This usually results in a white cast over a freshly cut lawn. Later, tips of grass blades will turn brown.

A new lawn has much softer blades of grass and has a higher moisture content. It is important for this type of lawn to be cut with sharp blades.

Cutting height will vary with different types of grass, climate and individual preference. Generally, grass should be cut about 1-1/2" long in spring, and not less than 2" long in hot summer weather.

If grass is high, or if it contains a high degree of moisture, cut it first with mower set high and then cut it with mower set lower. This gives better distribution or collection of clippings and provides a clean second cut.

Height of cut should not be set too low on thick, lush lawns. Such grass, if cut too short, may die. This also applies to springy, heavy growth lawns. If blade is set too low, mower pan will drag on grass and restrict air flow thus reducing discharge or collection of clippings.

Grass should be cut when it is dry; not when it is wet from dew, rain or from watering. When wet, grass tends to pack inside mower pan or chute and will not discharge, mulch or bag properly, especially if height of cut is set too low.
To insure most complete and even cut, overlap each swath.

Following the same pattern each time you mow your lawn can develop ridges at right angles to direction of mowing. By changing direction of mowing (when possible) you can prevent this.

When using side discharge, turn clockwise (right turn) when beginning to mow large open areas. This discharges clippings away from borderline objects (sidewalks, driveways, fences, etc.). After making a clockwise pass, mow in a counterclockwise (left turn) direction. This discharges clippings evenly over cut grass. Continuous clockwise mowing will cause a build up of clippings, preventing a uniform cut. Also, plan cutting so that you always trim with the left side of mower when using side discharge.

A good fertilization program and frequent watering will keep your lawn weed free and green all year long. Due to variations in climate, soil and grass varieties, contact your local garden supply dealer, park or golf course superintendent, or county agent to obtain specific information pertaining to your area.

NOTE: Be sure to empty grass bag and clean mower pan after each use. A dirty unit may not bag and/or cut grass properly.

Do not allow grass clumps or a coating of grass and debris to collect inside of grass bag or mower pan. Avoid operating over bare ground intermittent with grass cuttings as this causes dirt and grass to collect and cake under pan surface as well as in grass bag. To tip mower for cleaning under side of pan refer to Lubrication and Maintenance section of this manual.

Grass bag should be washed with hose and allowed to dry. Washing grass bag prevents debris buildup, that will clog mesh of bag, which will prevent proper air circulation and bagging of grass.

Mulching Tips

For best performance, it is recommended that the height of cut for your mower be set at, or as near as possible to, 3 inches and that not more than 1 inch of grass is removed per cutting. This can be controlled easier by observing the "Mulching Zone Decal" (Part No. 077123). The decal serves as a height gage for measuring the 1 inch maximum per cutting range.

Grass should be cut when it is dry, not when it is wet from dew, rain, or from watering. When wet, the grass will tend to ball and pack inside the mower pan and will not disperse evenly. If the grass does not disperse evenly, it is probably because too much grass is being removed per cutting, the grass is too wet, or the travel speed is too fast.

Lubrication and Maintenance

Ariens Dealers will provide any service which may be required to keep your mower operating at peak efficiency. Should engine repair or service be required, it can be obtained from an Ariens Dealer or an authorized engine manufacturer's service center.

WARNING: Stop engine, wait for moving parts to stop, and remove wire from spark plug (keep wire away from plug to prevent accidental starting) before attempting any lubrication or maintenance procedures.

CAUTION: DO NOT touch engine or parts which are hot from operation. Allow such parts to cool before servicing

General

Mower does not require any lubrication. Wheel assemblies are designed for long life without additional lubrication. (The professional models 911065 and 911317 has zerk fittings on drive carrier and rear axle).

Service Positions

A handlebar service position is provided, for tipping the unit, for convenient cleaning and service operations.

To place handlebar into the handlebar service position, remove braces from pins, rotate handlebar forward and place pins into holes of braces. See Figures 6 and 13.

NOTE: Nuts and bolts replace pins on Professional Models.

IMPORTANT: When tipping to service engine or unit, use the following service positions for the brand and type of engine on your mower:

Tecumseh Vector and Centura Engines; place handlebar into handlebar service position and tip machine to the rear.

Briggs & Stratton Quantum and Diamond Plus Engines; place handlebar into handlebar service position and tip the machine to the left, opposite the side descharge deflector.

Kawasaki Engines; place handlebar into handlebar service position and tip machine to the right, side discharge deflector side.

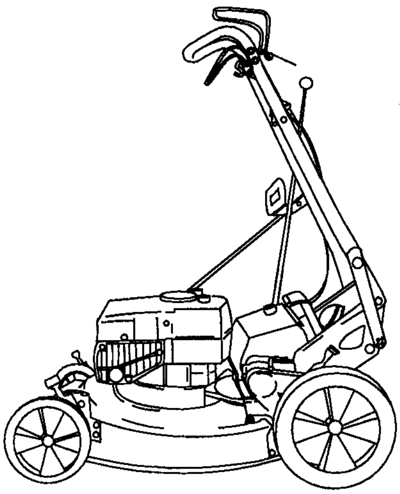

Figure 6: Handlebar Service Position

NOTE: On the models with Kawasaki engines, remove the side discharge deflector, if so equipped, prior to tipping the machine.

NOTE: A piece of plastic bag may be used to seal fuel tank opening when tipping mower. To seal, remove fuel tank cap, cover fuel tank opening with plastic, replace and tighten cap securely before tipping mower. Be sure to remove plastic before attempting to operate mower.

WARNING: Gasoline is highly flammable and must be handled with care.

IMPORTANT: If 4 cycle engine becomes "flooded" due to tipping, clean air cleaner. Gasoline, drawn into cylinder may wash cylinder wall and shorten engine life. If cylinder wall becomes washed with gasoline, remove spark plug, put one teaspoon of oil in cylinder, turn engine over a few times and replace spark plug.

Engine Oil (4 cycle engines)

Use a high quality detergent oil classified "For API Service SF or SG" with a single viscosity SAE30. Capacity is approximately 1-1/4 pints. Detergent oils keep engine cleaner and retard formation of gum and varnish deposits. DO NOT add anything to recommended oil.

Checking

The engine crankcase oil should be checked daily or every five (5) hours of operation.

To check oil, place mower on flat, level surface. Wipe all debris from around oil fill cap.

To check oil, place mower on flat, level surface. Wipe all debris from around oil fill cap.

Turn cap, remove dipstick from engine and wipe oil off dipstick. Insert dipstick into fill hole and turn slowly until cap bottoms firmly. Remove dipstick and observe oil level. If low, add fresh clean oil (of same type and viscosity as is in engine) to bring oil level to full (F) mark. Replace dipstick being sure to tighten cap firmly.

IMPORTANT: DO NOT over fill. Level must not exceed full (F) mark. Oil level MUST be maintained in safe operating range on dipstick at all times or engine damage will result.

Changing Oil

IMPORTANT: Change engine crankcase oil after first two (2) hours of operation, thereafter, change oil every twenty five hours of operation (more often in dusty dirty conditions).

NOTE: Run engine just prior to changing oil. Oil will flow more freely and carry away more contaminant's when warm.

Place mower into the Service Position specified for your brand and type of engine. (See Service Positions section). Professional models 911065 and 911317 remain in the operator's position. Attach oil drain hose to end of engine oil drain. Place a suitable container under oil fill, remove oil fill cap with dipstick and allow oil to drain into container.

Place machine back onto wheels, add fresh clean oil to proper level and be sure to replace oil fill cap with dipstick.

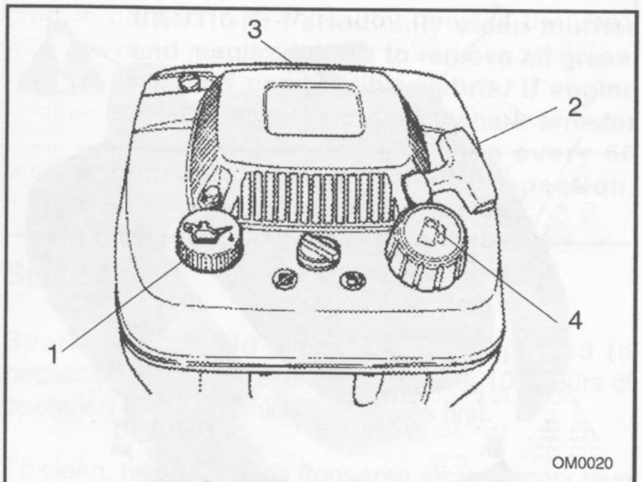

4 Cycle Kawasaki Engine

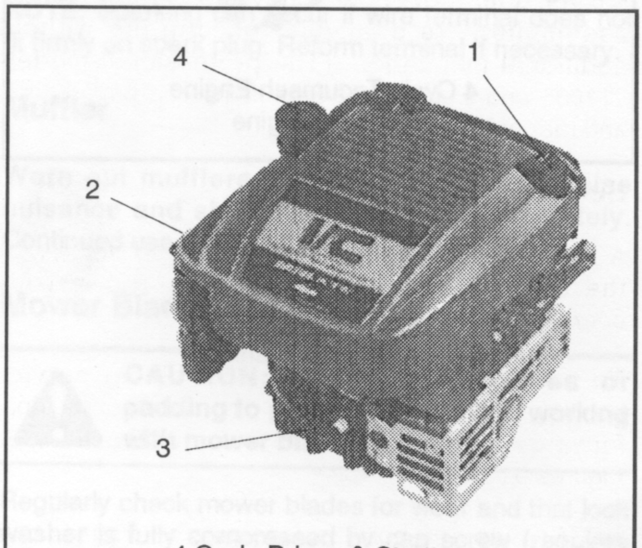

4 Cycle Briggs & Stratton Quantum & Diamond Plus Engine

1. Oil Fill Cap and Dipstick
2. Air Cleaner
3. Spark Plug and Wire
4. Fuel Cap and Tank

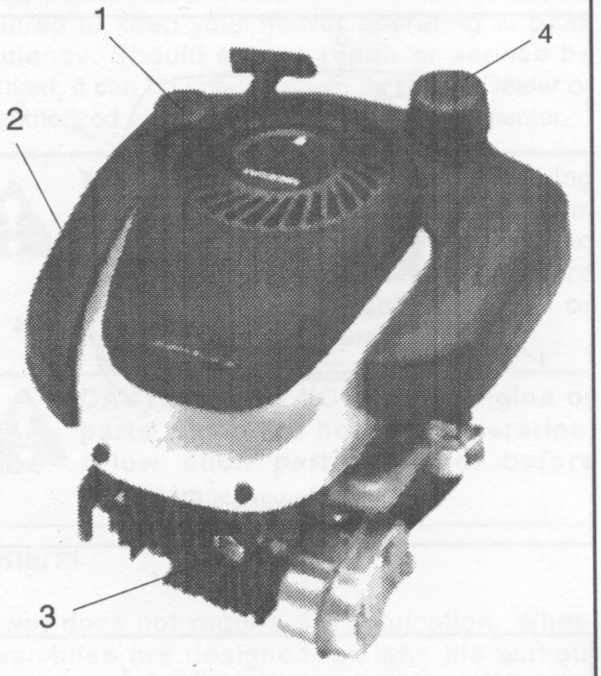

4 Cycle Tecumseh Engine
Centura Engine

1. Oil Fill Cap and Dipstick
2. Air Cleaner
3. Spark Plug and Wire
4. Fuel Cap and Tank

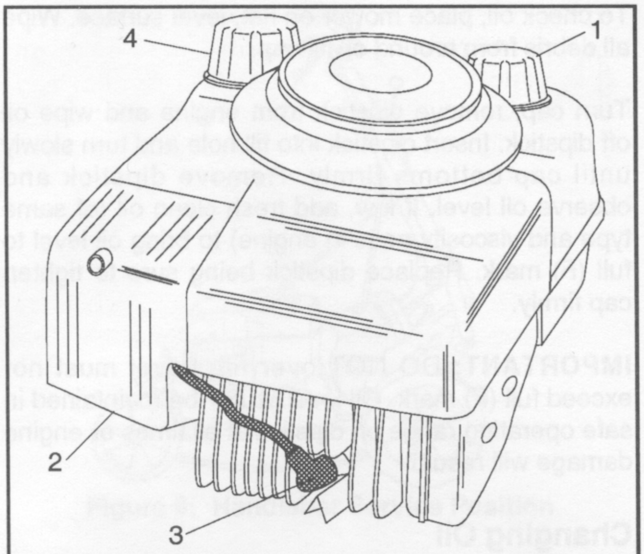

4 Cycle Tecumseh Engine
Vector Engine

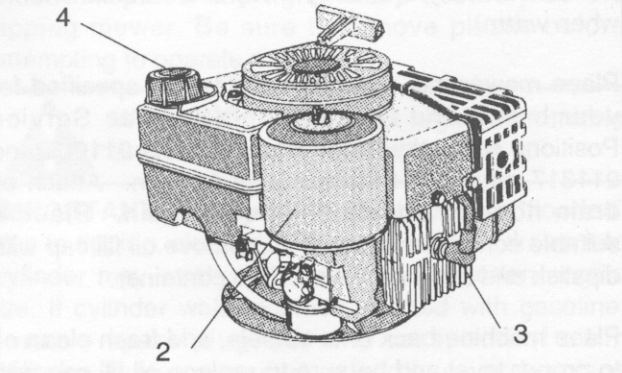

2 Cycle Tecumseh Engine

Air Cleaner

IMPORTANT: DO NOT run engine with air cleaner removed. Operating engine with dirty air cleaner for only a brief time can cause engine damage.

Lubrication and Maintenance (Continued)

Inspect air cleaner every 10 hours of operation or every month, whichever occurs first.

When dirty, filter elements should be removed and cleaned per the following instructions.

NOTE: Inspect air cleaner more often if unit is used under dirty dusty conditions.

To inspect and/or clean remove cover and filter element(s) and/or cartridge from air cleaner body.

NOTE: Clean air cleaner cover and body before installing clean or new components.

Foam Filter Element (Pre-cleaner) - Wash foam elements in warm water with detergent. Rinse thoroughly until all traces of detergent are eliminated, squeeze (don't wring) away excess water and air dry.

Soak foam element in clean fresh oil, wrap in paper towel or rag and squeeze out excess oil.

Cartridge/Or Paper Filter Element - Clean by tapping gently on flat surface. Replace if it is very dirty or becomes distorted.

Engine Cooling

The engine is air cooled. Air must circulate freely around engine and over cooling fins on cylinder head and block to prevent overheating.

Once a year or every one hundred (100) operating hours (more often if conditions require) clean engine fins and external surfaces of engine of dust, dirt, and oil deposits which can contribute to improper cooling.

IMPORTANT: DO NOT operate engine with blower housing removed - this will cause overheating and engine damage.

CAUTION: Periodically clean muffler and manifold areas to remove all grass, dirt and combustible debris. If engine muffler is equipped with spark arrester screen assembly, remove every 50 hours for cleaning and inspection. Replace if damaged.

Spark Plug

Spark plug should be cleaned or replaced (if necessary) and gap reset to .030" every 100 hours of operation or yearly whichever comes first.

To clean, remove debris from area around spark plug base, remove spark plug from engine, scrape and wash with a commercial solvent. DO NOT blast clean.

NOTE: Sparking can occur if wire terminal does not fit firmly on spark plug. Reform terminal if necessary.

Muffler

Worn out mufflers are more than just a noise nuisance and should be replaced immediately. Continued use could result in fire or explosion.

Mower Blade

CAUTION: Use sturdy gloves or padding to protect hands when working with mower blades.

Regularly check mower blades for wear and that lock washer is fully compressed by cap screw (requires 25-30 foot pounds of torque on cap screw.

WARNING: Stop engine, wait for moving parts to stop and remove wire from spark plug before attempting any maintenance procedures.

When blade needs sharpening, block blade to prevent rotation, remove cap screw(s), lock washer(s) and blade from shaft.

Sharpen both ends of blade at original angle (25 degrees), removing equal amounts of material from each end to maintain proper blade balance. New blades are balanced to within 1.3 inch ounces at factory, DO NOT grind around corner at tip of blade.

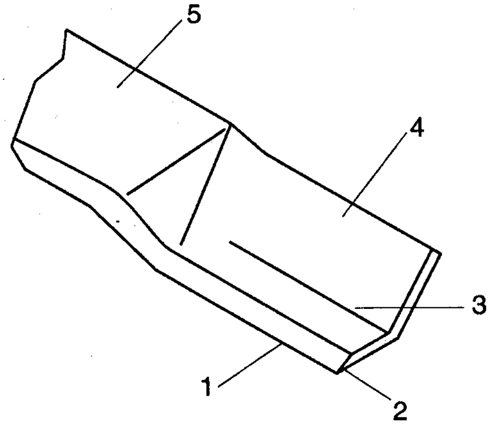

01172300 & 01176700 Mulching Blade

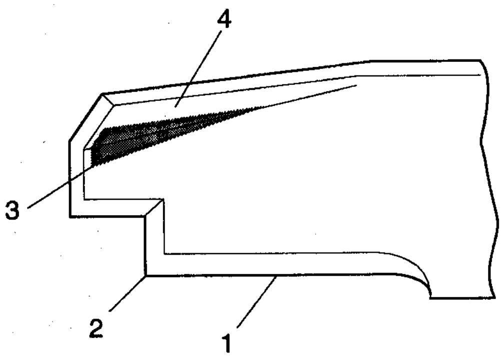

01137000 Standard Blade

1. Cutting Edge
2. Square Corner
3. Air Lift Erosion
4. Air Lift
5. Reverse Lift

Figure 8: Mower Blade

If cutting edge of blade cannot be sharpened in a straight line to within 1/8 of an inch of its end, replace blade with Ariens replacement blade only. Blades are available through your Ariens Dealer.

Install blade, lock washer(s) and tighten cap screw(s) until lock washer is fully compressed (requires 25-30 foot pounds of torque on nuts).

NOTE: The 01172300 mulching blade is the only blade to be used with the mulchmaster insert dome.

IMPORTANT: If mower is used under sandy soil conditions, replace blades when air lifts become eroded through at end.

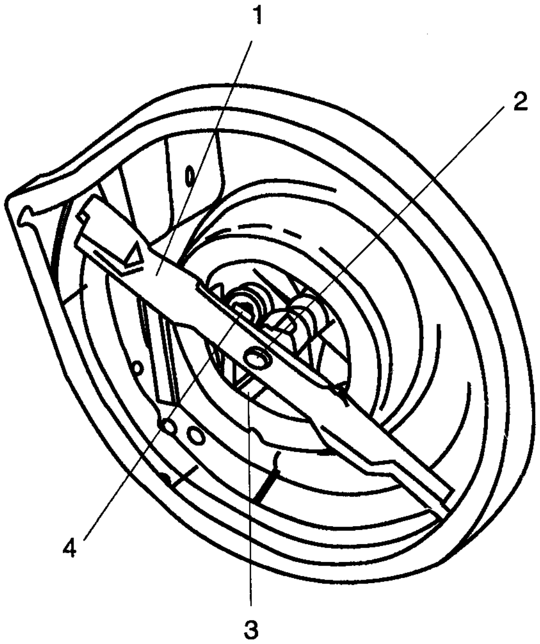

1. Blade
2. Cap Screws,Lock Washer, & Flat Washer
3. Drive Belt
4. Idler

Figure 9: Mower Blade Replacement

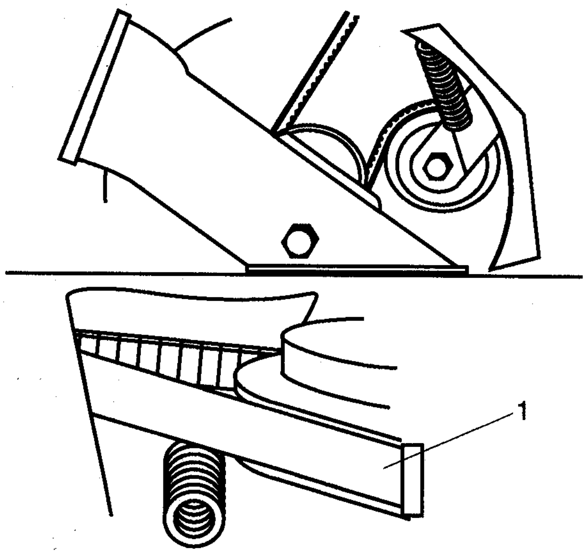

1. Drive Belt

Figure 10: Drive Belt

Drive Belt (self propelled models)

To remove drive belt, position right hand rear wheel Height Adjustment lever in first notch and left hand rear wheel Height Adjustment lever in third notch. This provides clearance between friction wheel and drive disk.

Remove belt from idler, drive disk and engine pulley. Pull belt through opening under mower pan and over blade.

Check idler for free rotation of pulley and movement of pivot.

Replace drive belt in reverse order being sure that belt seats in pulley grooves with idler positioned on back (flat) side of belt.

Battery (electric start model)

CAUTION: Do not put battery in fire or mutilate; battery may burst or release toxic materials. Do not short circuit; battery may cause burns.

A 12 volt, 2.5 ampere hour sealed lead acid battery is supplied with unit. Engine alternator will normally keep battery fully charged with a 3 to 5 minute start/run cycle.

IMPORTANT: Use battery supplied only. DO NOT attempt to "jump start" mower.

To charge with battery charger, connect charger plug to mating plug on battery (not engine) and plug charger into 120 volt Alternating Current (A.C.) outlet. Charge for 24 to 48 hours (battery may be charged for up to 72 hours with no harmful effects).

An engine run time of at least 8 hours is required to charge a fully discharged battery.

Swivel Lubrication (swivel models)

DANGER: To avoid inadvertent blade contact, NEVER attempt lubrication or maintenance procedures while the engine is running.

NOTE: Use Ariens multi-purpose grease (part number 000150) or a good grade of general purpose grease. Grease swivels every 10 hours of use.

NOTE: Lynch pin must be in the swivel lock hole while lubricating.

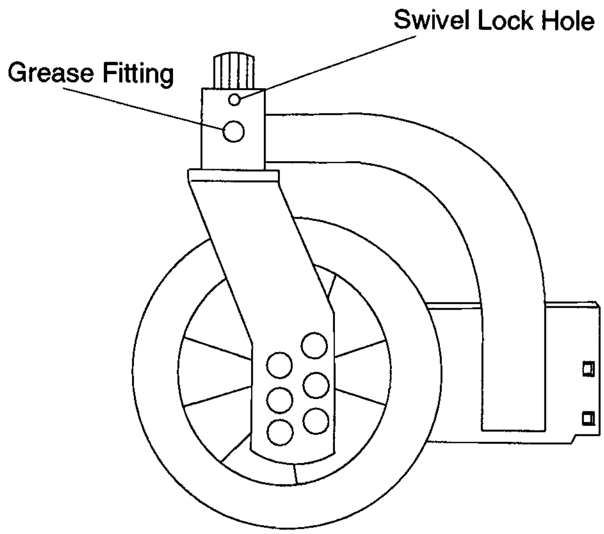

Figure 11: Swivel Lubrication

Lubrication and Maintenance (Continued)

Chart 1 shows the recommended service schedule that should be performed on a regular basis. More frequent service may be required due to working condition. (i.e. Heavy Loads, high ambient temperatures, dusty conditions or when airborne debris are present.) See the engine manual for maintenance instructions. Use chart 2 to record the actual hours on the hourmeter and the date at which each service item is performed.

MAINTENANCE SCHEDULE					
SERVICE PREFORMED	TIME INTERVALS BETWEEN SERVICE				
	DAILY	10 HRS.			
Check Engine Oil	●				
Check Belt Drive	●				
Check Air Cleaner	●				
General Lubrication		●			
Check Drive Control		●			
Check Mower Blade	●				
Check Fasteners		●			
Check Engine/Blade Controls	●				
Check Bag Wear		●			

Chart 1

Always use genuine Ariens service parts and accessories to ensure your machines peak performance.

Lubrication and Maintenance (Continued)

MAINTENANCE RECORD

TIME INTERVALS BETWEEN SERVICE	General Lubrication	Check the Fasteners	Check Drive Control	Check Bag Wear			
10 HRS.	●	●	●	●			
ACTUAL HOURS							
DATE							
20 HRS.	●	●	●	●			
ACTUAL HOURS							
DATE							
30 HRS.	●	●	●	●			
ACTUAL HOURS							
DATE							
40 HRS.	●	●	●	●			
ACTUAL HOURS							
DATE							
50 HRS.	●	●	●	●			
ACTUAL HOURS							
DATE							
60 HRS.	●	●	●	●			
ACTUAL HOURS							
DATE							
70 HRS.	●	●	●	●			
ACTUAL HOURS							
DATE							
80 HRS.	●	●	●	●			
ACTUAL HOURS							
DATE							
90 HRS.	●	●	●	●			
ACTUAL HOURS							
DATE							
100 HRS.	●	●	●	●			
ACTUAL HOURS							
DATE							
110 HRS.	●	●	●	●			
ACTUAL HOURS							
DATE							
120 HRS.	●	●	●	●			
ACTUAL HOURS							
DATE							
130 HRS.	●	●	●	●			
ACTUAL HOURS							
DATE							
140 HRS.	●	●	●	●			
ACTUAL HOURS							
DATE							

(Column header: SERVICE TO BE PERFORMED)

Always use genuine Ariens service parts and accessories to ensure your machines peak performance.

Chart 2

Lubrication and Maintenance (Continued)

MAINTENANCE RECORD

SERVICE TO BE PERFORMED \ TIME INTERVALS BETWEEN SERVICE	150 HRS.	160 HRS.	170 HRS.	180 HRS.	190 HRS.	200 HRS.	210 HRS.	220 HRS.	230 HRS.	240 HRS.	250 HRS.
ACTUAL HOURS											
DATE											
General Lubrication	●	●	●	●	●	●	●	●	●	●	●
Check the Fasteners	●	●	●	●	●	●	●	●	●	●	●
Check Drive Control	●	●	●	●	●	●	●	●	●	●	●
Check Bag Wear	●	●	●	●	●	●	●	●	●	●	●

Always use genuine Ariens service parts and accessories to ensure your machines peak performance.

Chart 2 (Continued)

> **WARNING. Stop engine, wait for moving parts to stop and remove wire form spark plug (keep wire away from plug to prevent accidental starting) before attempting any adjustment procedures.**

> **CAUTION: DO NOT change engine governor setting or over speed engine. "Operate engine at the governed no load speed recommended by the Ariens Company only." DO NOT exceed this speed as personal injury may result.**

Handlebar

- Holes in handlebar braces provide four height positions, a service and (except on professional models 911065 and 911317) a storage position.
- To adjust to a safe comfortable operating height, use one of four hole positions; 1,2,3, or 4 in order of increasing height, in brace on both sides of mower and place pin through hole in brace. (On professional models 911065 and 911317) use hole positions 1 & 3,1 & 4, 2 & 3 or 2 & 4.) Refer to illustration.
- To place handlebar into the handlebar service position, remove braces from pins, rotate handlebar forward and place pins into holes of braces. See Figures 6 and 12.

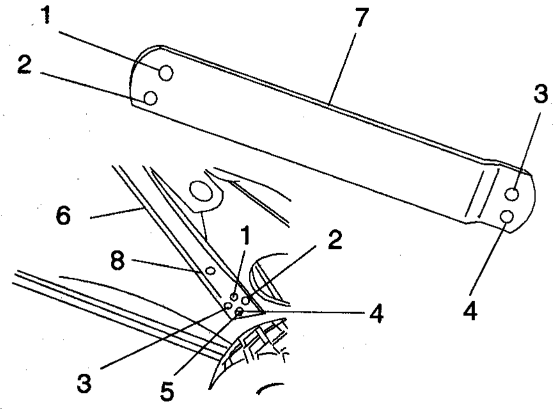

1. Hole No. 1
2. Hole No. 2
3. Hole No. 3
4. Hole No. 4
5. Pin
6. Brace
7. Professional Brace
8. Storage Position

Figure 12: Handlebar Height

- For storage, remove braces from pins, rotate handlebar forward and place pins into holes further up on braces.

NOTE: Nuts and bolts replace pins on Professional models.

Engine/Blade Control

- Engine Control must stop engine ignition, at a point 3/4"-1 1/4" from handlebar as control is released. To check, start engine and slowly release Control until engine stops firing.
- Measure distance between handlebar and control at the point that engine stopped firing.
- Turn cable nuts at handlebar mount clockwise if measurement is more than 11/4" or counterclockwise if measurement is less than 3/4". Turn nuts against mount to lock in position.

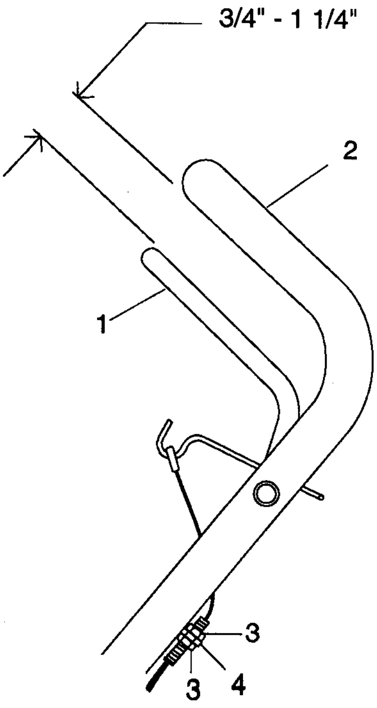

1. Engine Control
2. Handlebar
3. Cable Nuts
4. Mount

Figure 13: Engine Control

Drive Wheel (self propelled model)

- When the Wheel Drive Control is squeezed toward the handlebar the extension spring, located at the bottom end of the traction cable, must start to extend when the control is between 1" and 1-1/2" away from the handlebar. To check, squeeze the Wheel Drive Control toward the handlebar until the spring starts to open.
- Measure the distance between the Wheel Drive Control and handlebar at the handlebar indentation.
- To obtain the proper adjustment turn the cable nuts at either the handlebar end or the bottom end of the traction cable. Tighten the nuts against the bracket to lock in position.

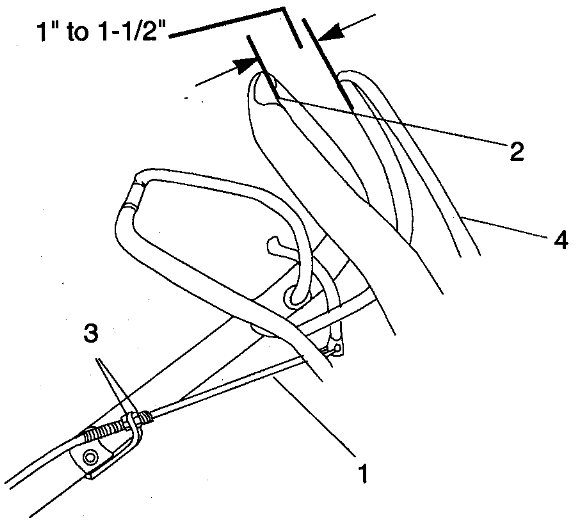

1. Traction Cable
2. Handlebar Indentation
3. Cable Nuts
4. Wheel Drive Control

Figure 14: Wheel Drive Control

Speed Control Bell Crank

- To adjust, remove cover, fully compress the helical spring lockwashers with lock nut and then back lock nut off one half turn. Align notch in L.H. side of cover with bolt and secure with knob.

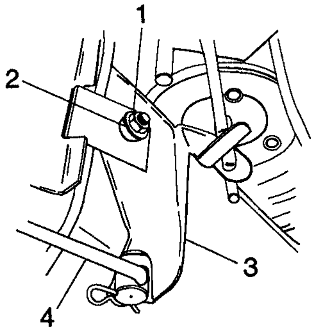

1. Lock Nut
2. Helical Spring Lockwashers
3. Speed Control Bell Crank
4. Speed Control Rod

Figure 15: Speed Control Bell Crank

Storage

WARNING: Never store mower in an enclosed area where fuel fumes may reach flame, sparks, pilot lights, or an ignited object. Drain fuel outdoors away from any ignition source. Use only approved (Red) fuel container.

Your authorized Ariens Dealer is trained and equipped to service your mower. A periodic checkup by your dealer will help reduce your maintenance costs.

Inspect mower for visible signs of wear, breakage or damage. Order any parts required and make necessary repairs to avoid delays when beginning use again.

Remove Grass Bag and clean out all debris prior to storage. Grass Bag may be stored in position on mower. Keep Grass Bag dry during storage.

On electric start models, fully charge battery and store in a cool dry location. (Refer to Battery in Lubrication and Maintenance Section.)

When storing mower for an extended period, refer to engine instruction for proper engine storage procedures.

Clean unit thoroughly. Touch up all areas to prevent rust. Matching touch up paint is available from your Ariens Dealer. Store mower in a cool, dry protected location.

Service Manual

Service manuals are available for owners who wish to perform some of their own maintenance and service operations. Should a complete service manual be desired, order by referring to the model and serial number of your machine.

When ordering parts always include the model and serial number of your unit to assure prompt service. A parts manual is included in your literature package to make ordering of service parts easier.

Walk Behind Mower Model Number________________
Walk Behind Mower Serial Number ________________

Mail Request to:

Ariens Service
655 West Ryan Street
P.O. Box 157
Brillion, WI 54110-0157

Trouble Shooting

1. Engine won't start

Low or empty gas tank.
Spark plug wire attached.
Engine/brake control cable deattached or broken.
Engine/brake control cable adjusted properly.
Engine/brake control bail engaged.
Discharged battery.

2. Self-propelled drive does not engage

Drive belt not in position.
Drive belt in good condition.
Rear wheels in the same cutting height.
Friction Wheel engagement adjusted properly.
Friction wheel in good condition.
Idler and idler spring installed properly.
Traction drive cable deattached or broken.
Traction drive bail engaged.
Bearings in good condition.
Debris in gear set.

Specifications

Model No. Description Name	911065 LM230sp	911067 MM223	911068 MM224sp
Length	60.5 153.7 CM	60.5 153.7 CM	60.5" 153.7 CM
Height	37.75 96 CM	37.75" 96 CM	37.75" 96 CM
Width	23" 58.4 CM	23" 58.4 CM	23" 58.4 CM
Weight Actual	113 Lbs	72 Lbs.	92.5 Lbs.
Engine - Manufacturer	Kawasaki	Tecumseh	Tecumseh
- Cycles	Four	Four	Four
- HP (3600 rpm)	5.0 HP	5.0 HP	5.5 HP
Fuel Tank Cap.	1.4 Qt.	1.5 Qt.	1.5 Qt.
Fuel	Unleaded	Unleaded	Unleaded
Primer Bulb	N/A	Standard	Standard
Throttle/Choke Control	Standard	N/A	N/A
Starting	Recoil	Recoil	Recoil
Cylinder Bore	Cast Iron Sleeve	Aluminum	Aluminum
Pressurized Oil System	Standard w/Oil Filter	Standard	Standard
Governed RPM	2850 + - 150	2850 + - 150	2850 + - 150
Crank Case Cap.	19 Oz.	27 Oz.	27 Oz.
Air Cleaner	Dual Element	Paper Element	Paper Element
Engine Oil Type	SAE. 30	SAE. 30	SAE. 30
Spark Plug	.30	.30	.30
Differential	Standard	N/A	Standard
Variable Speeds - MPH	0-4 MPH 0-6.4 KMPH	N/A	0-3.5 MPH 0-5.6 KMPH
Mower Deck Gauge	14 Gauge Stamped Steel	16 Gauge Stamped Steel	16 Gauge Stamped Steel
Baked Powder Paint	Standard	Standard	Standard
Cutting Width	21" 53.3 CM	21" 53.3 CM	21" 53.3 CM
Cutting Height	6 Positions 1.00" - 3.25" 2.5 - 8.3 Cm	6 Positions 1.25" - 3.5" '3.2-8.9 CM	6 Positions 1.25" - 3.5" '3.2-8.9 CM
Folding Handlebar	Standard One Piece	Standard One Piece	Standard One Piece
Adjustable Handle Bar	4 Position	4 Position	4 Position
Front Wheel Dia.	7.0" 17.8 CM	7.5" 19.1 CM	7.5" 19.1 CM
Rear Wheel Dia.	10.0" 25.4 CM	10.5" 26.7 CM	10.5" 26.7 CM
Side Discharge	Standard	N/A (Rear Opt)	N/A (Rear Opt)
Bagger	Standard	Optional	Optional
Accessory			
Dethatcher	711024	N/A	711024
Mulchmaster Plug	*	*	*
Leaf Shredder	711028	711028	711028
Side Discharge Chute	*	N/A	N/A
Rear Bagger	*	711030	711030
Swivel Wheel Kit	711033	711033	711033
Rear Discharge Chute	711032	711032	711032
Rear Roller Kit	711034	711034	711034
Mulching Accessory	711035	711035	711035

* = Part of Base Model

Specifications

Model No. Description Name	911069/911469 LM225sp/LM232sp	911070/911470 LM226sp/LM233sp	911071/911471 LM227sp/LM234sp
Length	60.5 153.7 CM	60.5 153.7 CM	60.5" 153.7 CM
Height	37.75 96 CM	37.75" 96 CM	37.75" 96 CM
Width	23" 58.4 CM	23" 58.4 CM	23" 58.4 CM
Weight Actual	99.5 Lbs	102.5 Lbs.	108.5 Lbs.
Engine - Manufacturer	Briggs & Stratton	Briggs & Stratton	Tecumseh
- Cycles	Four	Four	Four
- HP (3600 rpm)	5.5 HP	5.5 HP	6.0 HP
Fuel Tank Cap.	1.6 Qt.	1.6 Qt.	1.5 Qt.
Fuel	Unleaded	Unleaded	Unleaded
Primer Bulb	Standard	Standard	Standard
Throttle/Choke Control	N/A	N/A	N/A
Starting	Recoil	Recoil	Electric/Recoil
Cylinder Bore	Cast Iron Sleeve	Cast Iron Sleeve	Aluminum
Pressurized Oil System	Standard	Standard	Standard
Governed RPM	2900 + - 100	2900 + - 100	2850 + - 150
Crank Case Cap.	20 Oz.	20 Oz.	27 Oz.
Air Cleaner	Dual Clean	Dual Clean	Paper Element
Engine Oil Type	SAE. 30	SAE. 30	SAE. 30
Spark Plug	.30	.30	.30
Differential	Standard	Standard	Standard
Variable Speeds - MPH	0-4 MPH 0-6.4 KMPH	0-4 MPH 0-6.4 KMPH	0-4 MPH 0-6.4 KMPH
Mower Deck Gauge	14 Gauge Stamped Steel	14 Gauge Stamped Steel	14 Gauge Stamped Steel
Baked Powder Paint	Standard	Standard	Standard
Cutting Width	21" 53.3 CM	21" 53.3 CM	21" 53.3 CM
Cutting Height	6 Positions 1.25" - 3.5" '3.2-8.9 Cm	6 Positions 1.25" - 3.5" '3.2-8.9 CM	6 Positions 1.25" - 3.5" '3.2-8.9 CM
Folding Handlebar	Standard One Piece	Standard One Piece	Standard One Piece
Adjustable Handle Bar	4 Position	4 Position	4 Position
Front Wheel Dia.	7.5" 19.1 CM	7.5" 19.1 CM	7.5" 19.1 CM
Rear Wheel Dia.	10.5" 26.7 CM	10.5" 26.7 CM	10.5" 26.7 CM
Side Discharge	Standard	Standard	Standard
Bagger	Standard	Standard	Standard
Accessory			
Dethatcher	711024	N/A	N/A
Mulchmaster Plug	*	*	*
Leaf Shredder	711028	711028	711028
Side Discharge Chute	*	*	*
Rear Bagger	*	*	*
Swivel Wheel Kit	711033	*	*
Rear Discharge Chute	711032	711032	711032
Rear Roller Kit	711034	711034	711034
Mulching Accessory	711035	711035	711035

* = Part of Base Model

Specifications

Model No.	911072/911472	911073/911473
Description Name	**LM228sp/LM235sp**	**LM229sp/LM236sp**
Length	60.5 153.7 CM	60.5 153.7 CM
Height	37.75 96 CM	37.75 96 CM
Width	23" 58.4 CM	23" 58.4 CM
Weight Actual	99.5 Lbs	102.5 Lbs.
Engine - Manufacturer	Tecumseh	Tecumseh
- Cycles	Four	Four
- HP (3600 rpm)	6.0 HP	6.0 HP
Fuel Tank Cap.	1.5 Qt.	1.5 Qt.
Fuel	Unleaded	Unleaded
Primer Bulb	Standard	Standard
Throttle/Choke Control	N/A	N/A
Starting	Recoil	Recoil
Cylinder Bore	Aluminum	Aluminum
Pressurized Oil System	Standard	Standard
Governed RPM	2850 + - 150	2850 + - 150
Crank Case Cap.	27 Oz.	27 Oz.
Air Cleaner	Paper Element	Paper Element
Engine Oil Type	SAE. 30	SAE. 30
Spark Plug	.30	.30
Differential	Standard	Standard
Variable Speeds - MPH	0-4 MPH 0-6.4 KMPH	0-4 MPH 0-6.4 KMPH
Mower Deck Gauge	14 Gauge Stamped Steel	14 Gauge Stamped Steel
Baked Powder Paint	Standard	Standard
Cutting Width	21" 53.3 CM	21" 53.3 CM
Cutting Height	6 Positions 1.25" - 3.5" 3.2-8.9 CM	6 Positions 1.25" - 3.5" 3.2-8.9 CM
Folding Handlebar	Standard One Piece	Standard One Piece
Adjustable Handle Bar	4 Position	4 Position
Front Wheel Dia.	7.5" 19.1 CM	7.5" 19.1 CM
Rear Wheel Dia.	10.5" 26.7 CM	10.5" 26.7 CM
Side Discharge	Standard	Standard
Bagger	Standard	Standard
Accessory		
Dethatcher	711024	N/A
Mulchmaster Plug	*	*
Leaf Shredder	711028	711028
Side Discharge Chute	*	*
Rear Bagger	*	*
Swivel Wheel Kit	711033	*
Rear Discharge Chute	711032	711032
Rear Roller Kit	711034	711034
Mulching Accessory	711035	711035

* = Part of Base Model

Specifications

Model No.	911304	911311	911312
Description Name	LM21	LM21s	LM21sm
Length	60.5 153.7 CM	60.5 153.7 CM	60.5" 153.7 CM
Height	37.75 96 CM	37.75" 96 CM	37.75" 96 CM
Width	23" 58.4 CM	23" 58.4 CM	23" 58.4 CM
Weight Actual	81.5 Lbs	96.5 Lbs.	97.2 Lbs.
Engine - Manufacturer	Briggs & Stratton	Briggs & Stratton	Tecumseh
- Cycles	Four	Four	Four
- HP (3600 rpm)	5.0 HP	5.0 HP	6.0 HP
Fuel Tank Cap.	1.5 Qt.	1.5 Qt.	1.5 Qt.
Fuel	Unleaded	Unleaded	Unleaded
Primer Bulb	N/A	N/A	Standard
Throttle/Choke Control	Standard	Standard	N/A
Starting	Recoil	Recoil	Recoil
Cylinder Bore	Aluminum	Aluminum	Aluminum
Pressurized Oil System	Standard	Standard	Standard
Governed RPM	2900 + - 100	2900 + - 100	2850 + - 150
Crank Case Cap.	20 Oz.	20 Oz.	27 Oz.
Air Cleaner	Paper Element	Paper Element	Paper Element
Engine Oil Type	SAE. 30	SAE. 30	SAE. 30
Spark Plug	.30	.30	.30
Differential	N/A	Standard	Standard
Variable Speeds - MPH	N/A	0-4 MPH 0-6.4 KMPH	0-4 MPH 0-6.4 KMPH
Mower Deck Gauge	14 Gauge Stamped Steel	14 Gauge Stamped Steel	16 Gauge Stamped Steel
Baked Powder Paint	Standard	Standard	Standard
Cutting Width	21" 53.3 CM	21" 53.3 CM	21" 53.3 CM
Cutting Height	6 Positions 1.25" - 3.5" 3.2-8.9 CM	6 Positions 1.25" - 3.5" 3.2-8.9 CM	6 Positions 1.25" - 3.5" 3.2-8.9 CM
Folding Handlebar	Standard One Piece	Standard One Piece	Standard One Piece
Adjustable Handle Bar	4 Position	4 Position	4 Position
Front Wheel Dia.	7.5" 19.1 CM	7.5" 19.1 CM	7.5" 19.1 CM
Rear Wheel Dia.	10.5" 26.7 CM	10.5" 26.7 CM	10.5" 26.7 CM
Side Discharge	Standard	Standard	N/A (Rear Opt)
Bagger	Standard	Standard	Optional
Accessory			
Dethatcher	N/A	711024	711024
Mulchmaster Plug	711027	711027	711027
Leaf Shredder	711028	711028	711028
Side Discharge Chute	*	*	N/A
Rear Bagger	*	*	711030
Swivel Wheel Kit	711033	711033	711033
Rear Discharge Chute	711032	711032	711032
Rear Roller Kit	711034	711034	711034
Mulching Accessory	711035	711035	*

* = Part of Base Model

Specifications

Model No.	911313	911314	911315
Description Name	**LM21s**	**LM21sw**	**LM21se**
Length	60.5 153.7 CM	60.5 153.7 CM	60.5" 153.7 CM
Height	37.75 96 CM	37.75" 96 CM	37.75" 96 CM
Width	23" 58.4 CM	23" 58.4 CM	23" 58.4 CM
Weight Actual	99.5 Lbs	102.5 Lbs.	105.5 Lbs.
Engine - Manufacturer	Tecumseh	Tecumseh	Tecumseh
- Cycles	Four	Four	Four
- HP (3600 rpm)	6.0 HP	6.0 HP	6.0 HP
Fuel Tank Cap.	1.5 Qt.	1.5 Qt.	1.5 Qt.
Fuel	Unleaded	Unleaded	Unleaded
Primer Bulb	Standard	Standard	Standard
Throttle/Choke Control	N/A	N/A	N/A
Starting	Recoil	Recoil	Electric/Recoil
Cylinder Bore	Aluminum	Aluminum	Aluminum
Pressurized Oil System	Standard	Standard	Standard
Governed RPM	2850 + - 150	2850 + - 150	2850 + - 150
Crank Case Cap.	27 Oz.	27 Oz.	27 Oz.
Air Cleaner	Paper Element	Paper Element	Paper Element
Engine Oil Type	SAE. 30	SAE. 30	SAE. 30
Spark Plug	.30	.30	.30
Differential	Standard	Standard	Standard
Variable Speeds - MPH	0-4 MPH 0-6.4 KMPH	0-4 MPH 0-6.4 KMPH	0-4 MPH 0-6.4 KMPH
Mower Deck Gauge	14 Gauge Stamped Steel	14 Gauge Stamped Steel	14 Gauge Stamped Steel
Baked Powder Paint	Standard	Standard	Standard
Cutting Width	21" 53.3 CM	21" 53.3 CM	21" 53.3 CM
Cutting Height	6 Positions 1.25" - 3.5" 3.2-8.9 CM	6 Positions 1.25" - 3.5" 3.2-8.9 CM	6 Positions 1.25" - 3.5" 3.2-8.9 CM
Folding Handlebar	Standard One Piece	Standard One Piece	Standard One Piece
Adjustable Handle Bar	4 Position	4 Position	4 Position
Front Wheel Dia.	7.5" 19.1 CM	7.5" 19.1 CM	7.5" 19.1 CM
Rear Wheel Dia.	10.5" 26.7 CM	10.5" 26.7 CM	10.5" 26.7 CM
Side Discharge	Standard	Standard	Standard
Bagger	Standard	Standard	Standard
Accessory			
Dethatcher	711024	N/A	711024
Mulchmaster Plug	711027	711027	711027
Leaf Shredder	711028	711028	711028
Side Discharge Chute	*	*	*
Rear Bagger	*	*	*
Swivel Wheel Kit	711033	*	711033
Rear Discharge Chute	711032	711032	711032
Rear Roller Kit	711034	711034	711034
Mulching Accessory	711035	711035	711035

* = Part of Base Model

Specifications

Model No.	911316	911317	911318	911319
Description Name	LM21scsw	LM21scsw	LM21s	LM21sw
Length	60.5 153.7 CM	60.5 153.7 CM	60.5 153.7CM	60.50 153.7CM
Height	37.75" 96 CM	37.75" 96 CM	37.75" 96CM	37.75" 96CM
Width	23" 58.4 CM	23" 58.4 CM	23" 58.4 CM	23" 58.4CM
Weight Actual	88 Lbs	113 Lbs	99 Lbs.	99.5 Lbs.
Engine - Manufacturer	N/A	Kawasaki	Tecumseh	Briggs & Stratton
- Cycles	N/A	Four	Two	Four
- HP (3600 rpm)	N/A	5.0 HP	5.0 HP	5.0 HP
Fuel Tank Cap.	N/A	1.4 Qt.	1.5 Qt.	1.5 Qt.
Fuel	N/A	Unleaded	Unleaded/Oil (50:1)	Unleaded
Primer Bulb	N/A	N/A	Standard	N/A
Throttle/Choke Control	N/A	Standard	N/A	Standard
Starting	N/A	Recoil	Recoil	Recoil
Cylinder Bore	N/A	Cast Iron Sleeve	Aluminum	Aluminum
Pressurized Oil System	N/A	Standard w/Oil Filter	Standard	Standard
Governed RPM	N/A	2850 + - 150	3200 + - 150	2900 + - 100
Crank Case Cap.	N/A	19 Oz.	N/A	20 Oz.
Air Cleaner	N/A	Dual Element	Paper Element	Paper Element
Engine Oil Type	N/A	SAE. 30	N/A	SAE.30
Spark Plug	N/A	.30	.30	.30
Differential	Standard	Standard	Standard	Standard
Variable Speeds - MPH	0-4 MPH 0-6.4 KMPH	0-4 MPH 0-6.4 KMPH	0-3.5 MPH 0-5.6 KMPH	0-4 MPH 0-6.4 KMPH
Mower Deck Gauge	14 Gauge Stamped Steel	14 Gauge Stamped Steel	14 Gauge Stamped Steel	14 Gauge Stamped Steel
Baked Powder Paint	Standard	Standard	Standard	Standard
Cutting Width	21" 53.3 CM	21" 53.3 CM	21" 53.3 CM	21" 53.3 CM
Cutting Height	6 Positions 1.25" - 3.5" 3.2-8.9 CM	6 Positions 1.25" - 3.5" 3.2-8.9 CM	6 Positions 1.25" - 3.5" 3.2-8.9 CM	6 Positions 1.25" - 3.5" 3.2-8.9 CM
Folding Handlebar	Standard One Piece	Standard One Piece	Standard One Piece	Standard One Piece
Adjustable Handle Bar	4 Position	4 Position	4 Position	4 Position
Front Wheel Dia.	7.5" 19.1 CM	7.5" 19.1 CM	7.5" 19.1 CM	7.5" 19.1 CM
Rear Wheel Dia.	10.5" 26.7 CM	10.5" 26.7 CM	10.5" 26.7 CM	10.5" 26.7 CM
Side Discharge	Standard	Standard	Standard	Standard
Bagger	Standard	Standard	Standard	Standard
Accessory				
Dethatcher	N/A	N/A	711024	N/A
Mulchmaster Plug	711027	711027	*	711027
Leaf Shredder	711028	711028	711028	711028
Side Discharge Chute	*	*	*	*
Rear Bagger	*	*	*	*
Swivel Wheel Kit	711033	711033	711033	711033
Rear Discharge Chute	711032	711032	711032	711032
Rear Roller Kit	711034	711034	711034	711034
Mulching Accessory	711035	711035	711035	711035

* = Part of Base Model

Dealer Preparation

Consumer Note: Your Ariens Dealer is expected to complete these preparation steps and review important information, including this manual, with you before or upon delivery of unit.

The preparation information is included here so that you and your dealer may review it together.

NOTE: All references to "Left", "Right", "Front" and "Rear" are given from operator's position.

WARNING: Failure to follow all instructions could result in personal injury and/or damage to mower. Remove wire from spark plug before attempting any adjustment or assembly procedure.

Instructions contained in this manual apply to several models of mower. Use the instructions that apply to your unit.

Tools Required:

None

Package Contents - All Models (except where noted).

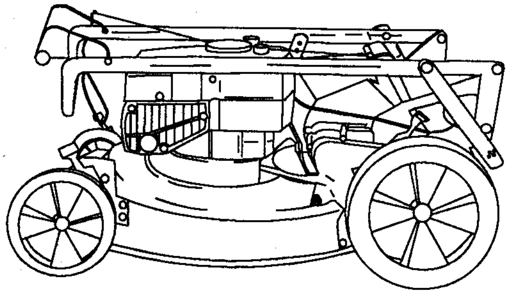

Mower Assembly

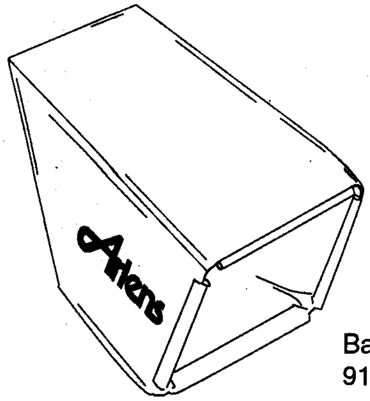

Bag (Not included in 911067 & 911068)

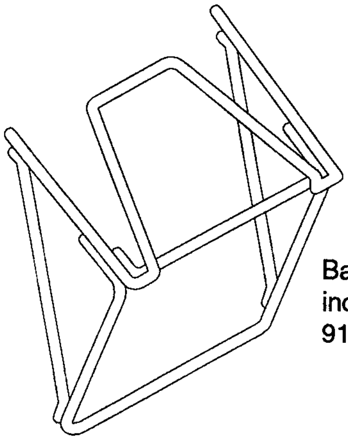

Bagger Frame (Not included in (911067 & 911068)

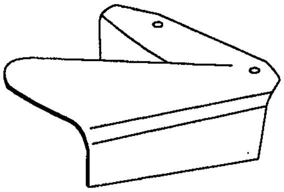

Side Discharge Chute (not included in 911067 and 911068)

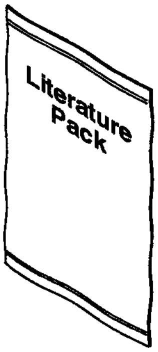

IMPORTANT: Engines are shipped without oil in engine crankcase. Refer to Lubrication and Maintenance Section for filling instructions.

Step 1

Remove the mower and other components from shipping container.

Dealer Preparation

Step 2

Unfold the handlebar. Select a safe comfortable handlebar operating height, place hole in braces onto pins on both sides of mower. (Refer to Adjustments Section.)

On Professional models, nuts and bolts are used to secure handlebar.

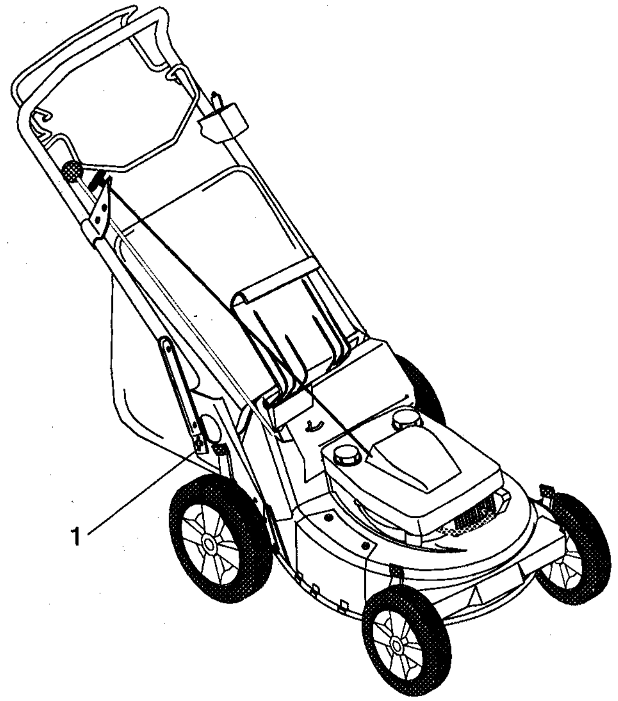

1. Handlebar Height Adjustment Holes

Figure 16: Handlebar Set-up

Step 3 (Self Propelled Models)

On self propelled models, Speed Selector rod is shipped on handlebar with hardware in position. Remove hair pin and washer, insert bent end of rod through hole in swivel of speed control bell crank, place washer onto rod and retain with hair pin.

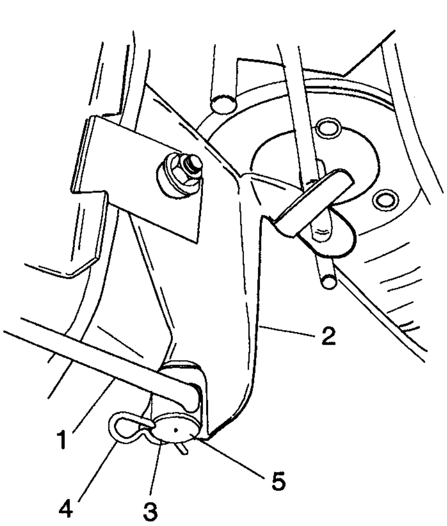

1. Speed Selector Rod
2. Speed Control Bell Crank
3. Washer
4. Hair Pin
5. Swivel

Figure 17: Speed Selector

Step 4

Assemble grass bag onto bag frame by sliding bag over frame (longest side of bag is top and goes over long side of frame).

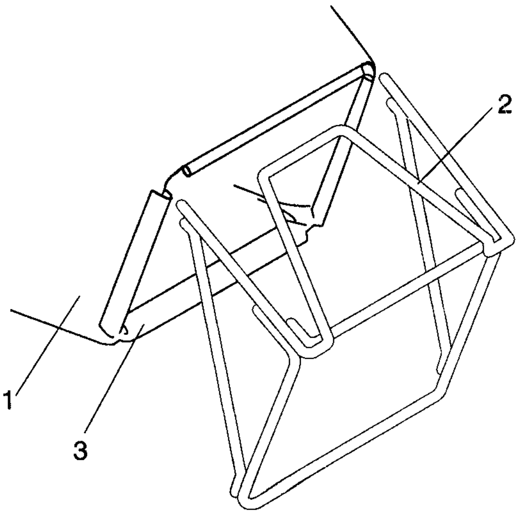

1. Grass Bag
2. Bag Frame
3. Bag Molding

Figure 18: Grass Bagger

Secure bag to each side of bag frame by separating molding on bag enough to slide frame into molding. Be sure molding is completely seated on all four sides of bag frame.

To install grass bag or side discharge deflector on mower refer to Pre-Starting in Operation Section of this manual.

WARNING: DO NOT operate mower unless either side discharge opening cover or side discharge deflector is installed. Objects may be picked up and thrown causing damage or personal injury. Never operate engine with rear door open unless grass bag is in place.

Step 5 (electric start models)

On electric start models, battery was charged before unit was shipped but may start mower only a few times because of long term self discharge. Fully charge battery before delivery of mower to customer. (Refer to instructions in Lubrication and Maintenance Section.)

Step 6

Engine/Blade Control feature on this mower must cause engine and blade to stop within 3 (three) seconds whenever operator releases control on handlebar. Control was adjusted at factory but must be checked according to instructions in Adjustments Section of this manual.

Step 7

Oil air cleaner precleaner per instructions in Lubrication and Maintenance section of this manual before delivery to customer.

Step 8

Complete Walk Behind Lawn Mower Warranty Registration Form and mail original copy to Ariens Company.

Warranty is registered under model and serial number found on decal on mower pan.

Step 9

Using the Owner's Manual, instruct customer on controls and operation of unit. Emphasize safety and discuss the Safety Precautions.

Explain recommended lubrication and maintenance of the unit.

IMPORTANT: Remind customer to change oil in 4 cycle engine crankcase after first two (2) hours of operation.

Advise customer on adjustments, demonstrate how to install grass bag, deflector and discharge opening cover.

Explain Ariens Company, Limited Warranty Policy, and fill out Original Purchaser Registration Card, Parts and Repair Manual Order Form and return to Ariens Company. Place Model and Serial Number on page (1) of this manual.

Give customer his Owner's Manual and engine manufacturer's instructions. Advise him to thoroughly read and understand them.

Accessories

Enhance your Walk Behind Lawn Mower with these Ariens Accessories.

71102400	Dethatcher
71102700	Mulchmaster Plug
71102800	Leaf Shredder
71102900	Side Discharge Deflector
71103000	Grass Bag
71103200	Rear Discharge Chute
71103300	Swivel Wheel
71103400	Rear Roller
71103500	Mulching Accessory

Be sure to always use genuine Ariens parts to keep your walk behind lawn mower running like new.

ARIENS 5YR LIMITED WARRANTY

Quality PRODUCTS Quality GUARANTEE

Ariens Company hereby warrants to the original consumer purchaser that products manufactured by Ariens Company will be free from defects in material and workmanship FOR A PERIOD OF FIVE (5) YEARS FROM THE DATE OF PURCHASE, EXCEPT AS NOTED BELOW.

LABOR 2/5 PARTS

PROTECTION PLAN

- The Company will provide for the replacement of any part found upon examination by the Company to be defective. Such repair or replacement will be free of charge to the purchaser (labor and parts) for **two years** (24 months) from the date of purchase. Ariens manufactured parts (but not labor) will be free of charge for an **additional *three years*** (36 months) thereafter.

This warranty is subject to the following exceptions and limitations:

PURCHASER RESPONSIBILITIES -
- Maintenance & minor adjustments per owners manual
- Notification of need for warranty service
- Transportation to/from place of warranty repair

PRODUCT REGISTRATION -
- Return of registration card required to validate warranty

PURCHASED & WEAR

PURCHASED COMPONENTS AND NORMAL WEAR -
- **Two year** labor and parts on purchased components i.e., (tractor drive train components manufactured by Dana, Eaton, Foote, Sundstrand and any plastic and electrical components, wire harnesses, bags, boots tubes, etc.).
- Two year labor and parts on normal wear items i.e., (belts and rubber components, bearings, cables, controls, clutches, tines, etc.).

BATTERY WARRANTY PRORATED -
- **One to six months • *free replacement***
- Seven to twelve months - 50 % credit
- Thirteen to twenty-four months - 25% credit

COMMERCIAL PROFESSIONAL

WARRANTY - COMMERCIAL PRODUCTS -
- **One year** parts and labor
- Product labeled commercial/professional
- Household use - 5 year limited warranty applies

90

RENTAL USE - ALL PRODUCTS
- **NINETY DAYS** LABOR & PARTS

CONSUMER PRODUCT - PUT TO COMMERCIAL, INDUSTRIAL, INSTITUTIONAL USE -
- **NINETY DAYS** LABOR & PARTS

SERVICE PARTS AND ACCESSORIES -
- **NINETY DAYS** LABOR & PARTS

SERVICE -
- For warranty service, contact any Ariens Distributor or Dealer. For the name and location of the Ariens Distributor or Dealers in your area, and for further warranty information, write or call the Ariens Company.

ENGINES, ENGINE ACCESSORIES, AND PEERLESS PRODUCTS -
- Covered only by manufacturer's warranty.

NO

EXCLUSIONS -
- No warranty is extended to blades, mower vanes, skid shoes, runners, scraper blades, shear bolts, light bulbs, headlights and any equipment which has been altered, misused, misassembled, improperly adjusted,neglected, or damaged by accident.
- No warranty is extended for service completed by someone other than an authorized distributor or dealer.
- No warranty is extended on any parts that are not genuine Ariens service parts.

Ariens Company reserves the right to incorporate any changes in design into its products without obligation to make such changes on products previously manufactured.

DISCLAIMER OF FURTHER WARRANTY

There is no other express warranty. Implied warranties, including any warranty of merchantability or fitness for a particular purpose, are limited to the duration of this written warranty, and are excluded to the extent permitted by law. There are no warranties which extend beyond the description of the product contained herein. In no event shall the company be liable for indirect, special or consequential damages (such as loss of anticipated profits) in connection with the consumer's use of the product.

This warranty gives you specific legal rights, and you may also have other rights which vary from state to state. Some states do not allow the exlusion of incidental or consequential damages, or limitations on how long an implied warranty lasts, so the above limitation and exclusions may not apply to you.

Crafted In America Since 1933

Ariens®

Index

Accessories 34

Adjustments 21
- Drive Wheel 22
- Engine/Blade Control 21
- Handlebar 21
- Speed Control Bell Crank 22

Controls and Features 6

Lubrication and Maintenance 12
- Battery Service 17
- Drive Belt 17
- Engine Maintenance 12
- Maintenance Charts 18
- Mower Blade 15
- Service Positions 12
- Swivel Wheel Lubrication 17

Models 1-2

Operation 7
- Cutting Heights 8-9
- Electric Start 10
- Engine/Blade Control 10
- Handlebar Height 7
- Mower Configurations 7-8
- Mulching Tips 11
- Operating Tips 10-11
- Primer 10
- Rewind Starter 10
- Speed Selector 10
- Stopping 10
- Throttle 10
- Wheel Drive Control 10

Preparation 31
- Package Contents 31
- Steps to Assemble 31-33

Safety Alert Symbol and Notations i

Safety Decals 5

Safety Precautions 3-4
- Maintenance and Storage 4
- Operation 3-4
- Preparation 3
- Training 3

Service Manual 23

Specifications 25-30

Storage 23

Trouble Shooting 24

Warranty 35

Ariens

911 Series Walk Behind Lawn Mowers Dealer Preparation Checklist

NOTE: Refer to Owner's Manual for detailed instructions.

☐ 1. Unfold handlebar and adjust for height.

☐ 2. Install speed selector rod if applicable.

☐ 3. Install grass bag on bag frame and on unit.

☐ 4. Charge battery is applicable.

☐ 5. Fill engine crankcase with recommended oil.

☐ 6. Add recommended fuel.

☐ 7. Start engine and check engine control.

☐ 8. Check wheel drive control.

☐ 9. Complete Warranty Registration form and mail to Ariens Company.

☐ 10. Using Owner's Manual instruct customer on controls and operation of unit. Emphasize safety and discuss the Safety Precautions.

Explain recommended lubrication and maintenance of unit.

Advise customer on adjustments.

Give customer his Owner's Manual and engine manufacturer's instructions. Inform him of his 5 year limited warranty. Advise him to thoroughly read and understand them.

Ariens Company
655 W. Ryan Street
Brillion, WI 54110-1098

Part No. 079915
Printed in U.S.A.